LiAir Standard

UAV Mountable LiDAR Scanning System

LiAir Standard

The GVI LiAir is our flagship aerial LiDAR unit. It integrates a highly accurate Velodyne LiDAR sensor (VLP-16/HDL32E), POS and on-board computer. The unit itself, is capable of being reliably mounted onto UAV's such as DJI m600 Pro or our in-house designed UAV. The LiAir continues to prove itself as being a lightweight, reliable and affordable aerial LiDAR solution.

+/- 12cm Absolute Accuracy

2.2kg

100m Scanning Range

+15° to -15° Vertical FOV

360° Horizontal FOV

Optional Camera Available

Kokyo 株式会社光響
http://www.symphotony.com/ メール：info@symphotony.com

Lidar Sensor Specifications

Safety Level	Class 1 Eye-safe
Measurement Range	Up to 100m
Accuracy	±3cm (typical)
Field of View	+15° to -15° Vertical FOV
	360° Horizontal FOV
Rotation Rate	5Hz ~20Hz
Angular Resolution	Vertical 2.0°
	Horizontal 0.1°~0.4°
Laser Wavelength	903nm
Max Effective Measurement Rate	300,000Pts/sec

Platform: DJI MATRICE 600 Pro

Diagonal Wheelbase	1133mm
Dimensions	1668 mm x 1518 mm x 727mm (Propellers, frame arms and GPS mount unfolded)
Weight (with six batteries)	9.5 kg
Max Takeoff Weight Recommended	15.5 kg
Hovering Time (with six batteries)	No payload: 32min
	6kg payload: 16min
Max Wind Resistance	8m/s
Max Speed	18m/s (No wind)
Cruising Radius	2Km
Operating Temperature	-10° C to 40° C
Battery	4500mAh * 6

Navigation System

Constellation Support	GPS,GLONSS,BD
Attitude Accuracy	0.1°(1σ)
Azimuth precision	0.1°(1σ)

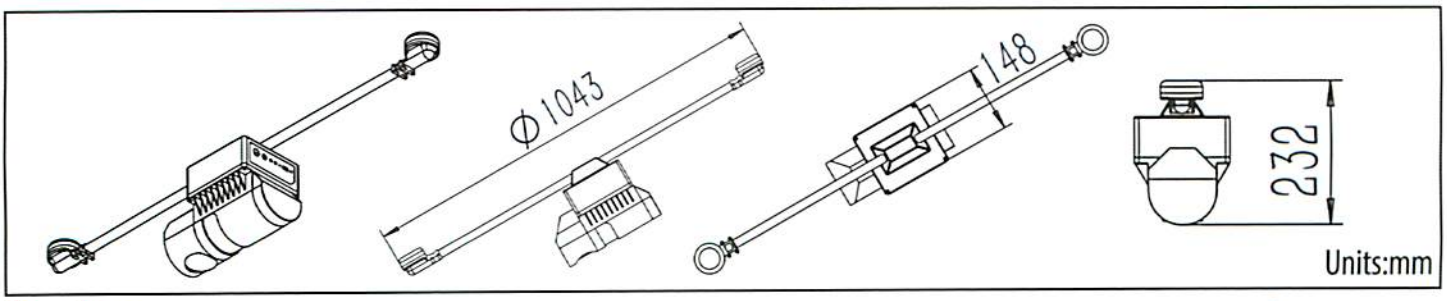

Kokyo 株式会社光響
http://www.symphotony.com/ メール：info@symphotony.com
www.greenvalleyintl.com info@greenvalleyintl.com (+1) 209.720.4054 2120 University Ave. Ste. 210 | Berkeley, CA | USA | 94704
GreenValley International
Map the World in 3D

LiAir Pro

UAV Mountable LiDAR Scanning System

LiAir Pro

is our most robust and accurate aerial LiDAR unit. It integrates a highly precise LiDAR sensor, POS, on-board computer and customizable operating system. Compatible with Riegl sensors, the LiAir Pro is our solution to projects which require maximum accuracy, range and flight-time.

+/- 5cm Absolute Accuracy

6.5 kg

3-920m (@reflectivity≥60%) Scanning Range

Up to 330° Horizontal FOV

Optional Camera Available

Kokyo 株式会社光響
http://www.symphotony.com/ メール：info@symphotony.com

Lidar Sensor Specifications

Safety Level	Class 1 Eye-safe
Measurement Range	3m-920m
Accuracy	±10mm (typical)
Precision	5mm
Field of View	Up to 330°
Rotation Rate	5Hz ~20Hz
Angular Measurement Resolution	0.001°
Max. Effective Measurement Rate	500,000Pts/sec

Platform: GV2000

Diagonal Wheelbase	2000mm
Dimensions	2450 mm x 2450 mm x 800 mm (Propellers, frame arms and GPS mount unfolded)
Weight (with six batteries)	15.5 kg
Max Takeoff Weight Recommended	45.5 kg
Hovering Time (with six batteries)	15~60min
Max Wind Resistance	10m/s
Max Speed	15m/s (No wind)
Cruising Radius	2km
Operating Temperature	-15° C to 40° C

Navigation System

Horizontal Position Accuracy (RMS)	
Single point L1/L2	1.2m
SBAS	0.6m
DGPS	0.4m
RT-2	1cm+1ppm

Performance During GNSS Outages

Outage Duration: 0s Positioning Mode: PP

Position Accuracy		Velocity Accuracy		Attitude Accuracy		
Horizontal	Vertical	Horizontal	Vertical	roll	Pitch	Heading
0.010	0.020	0.020	0.010	0.006	0.006	0.019

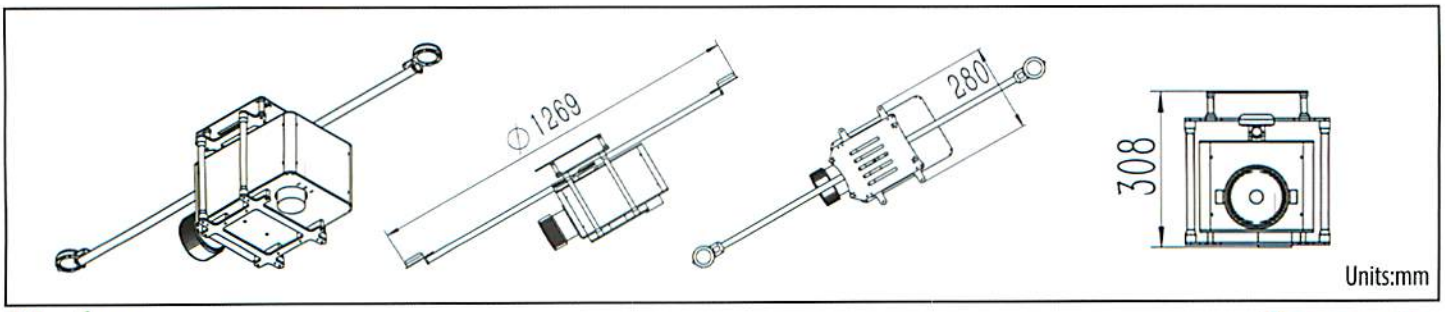

Kokyo 株式会社光響
http://www.symphotony.com/ メール：info@symphotony.com
www.greenvalleyintl.com info@greenvalleyintl.com (+1) 209.720.4054 2120 University Ave. Ste. 210 | Berkeley, CA | USA | 94704
GreenValley International
Map the World in 3D

Kokyo 株式会社光響
http://www.symphotony.com/ メール：info@symphotony.com

LiDAR360

Comprehensive LiDAR Post-Processing Software

Our flagship software, LiDAR360, provides a comprehensive solution to post-processing LiDAR point cloud data. The platform allows users to visualize, manipulate and analyze large point cloud datasets. The Forestry, Powerline, Terrain and Urban modules allow for a quick and efficient method for users from a multitude of industries to extract useful geospatial information.

- Visualization
- Powerline
- Forestry
- Terrain
- Strip Adjustment
- Classification
- Other Tools

Main Features

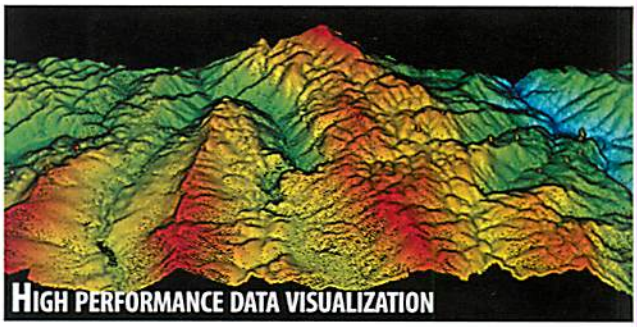

Display of high density LiDAR point cloud data with multiple display modes.

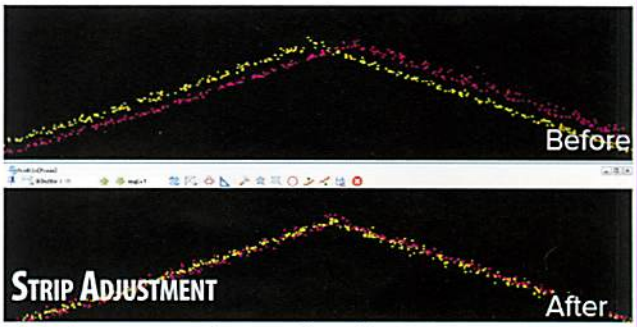

Adjust the orientation and position offsets of the LiDAR equipment.

Quickly and efficiently classify points as ground, vegetation, power lines tower and more.

Generate digital elevation models (DEM), digital surface models (DSM), canopy height models (CHM) and other raster products.

Other Tools

Measurement, conversion, outlier removal, normalization, clipping and other manipulation tools.

www.greenvalleyintl.com
info@greenvalleyintl.com
(+1) 209.720.4054
2120 University Ave. Ste. 210 | Berkeley, CA | USA | 94704

GreenValley International
Map the World in 3D

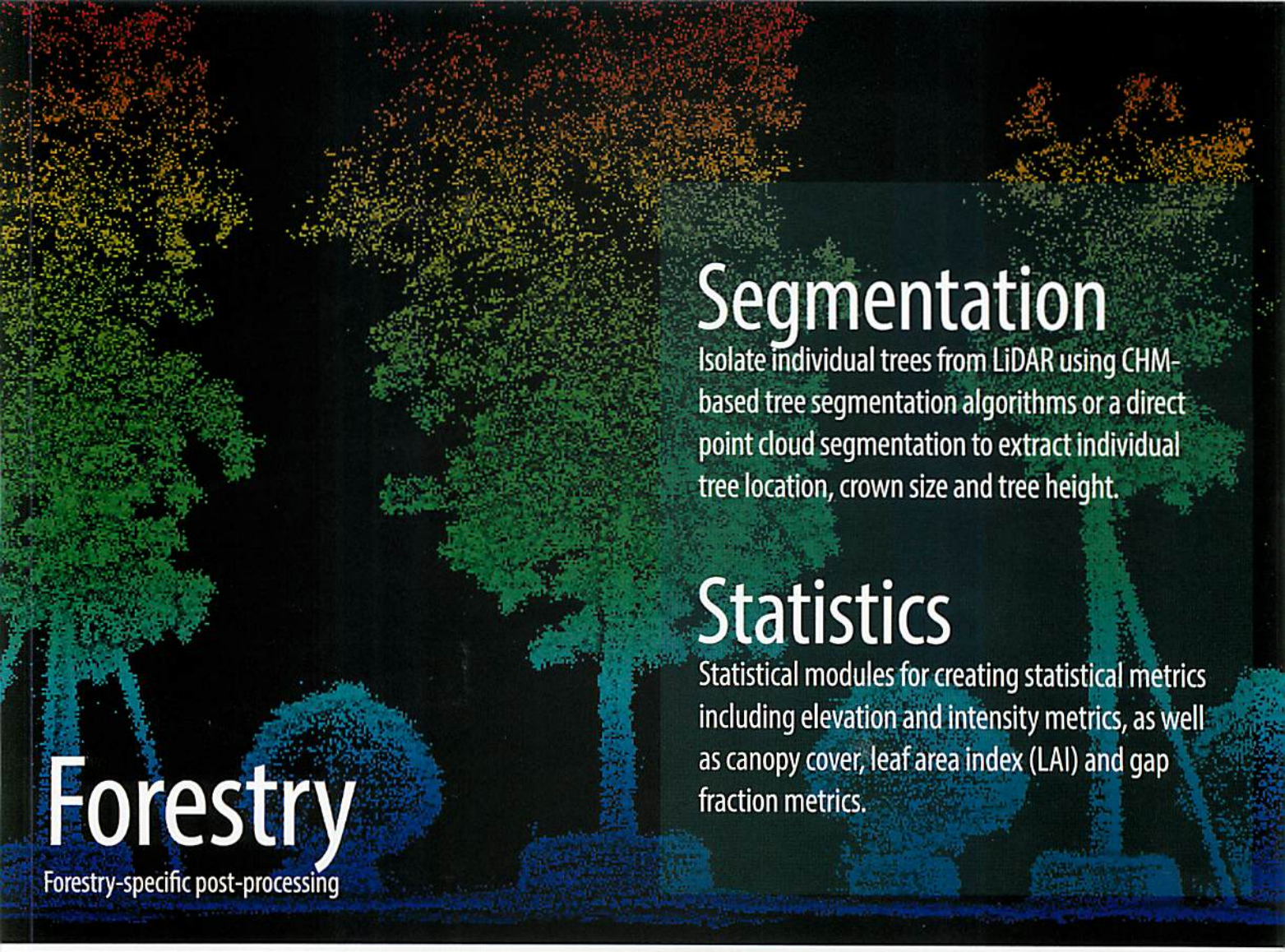

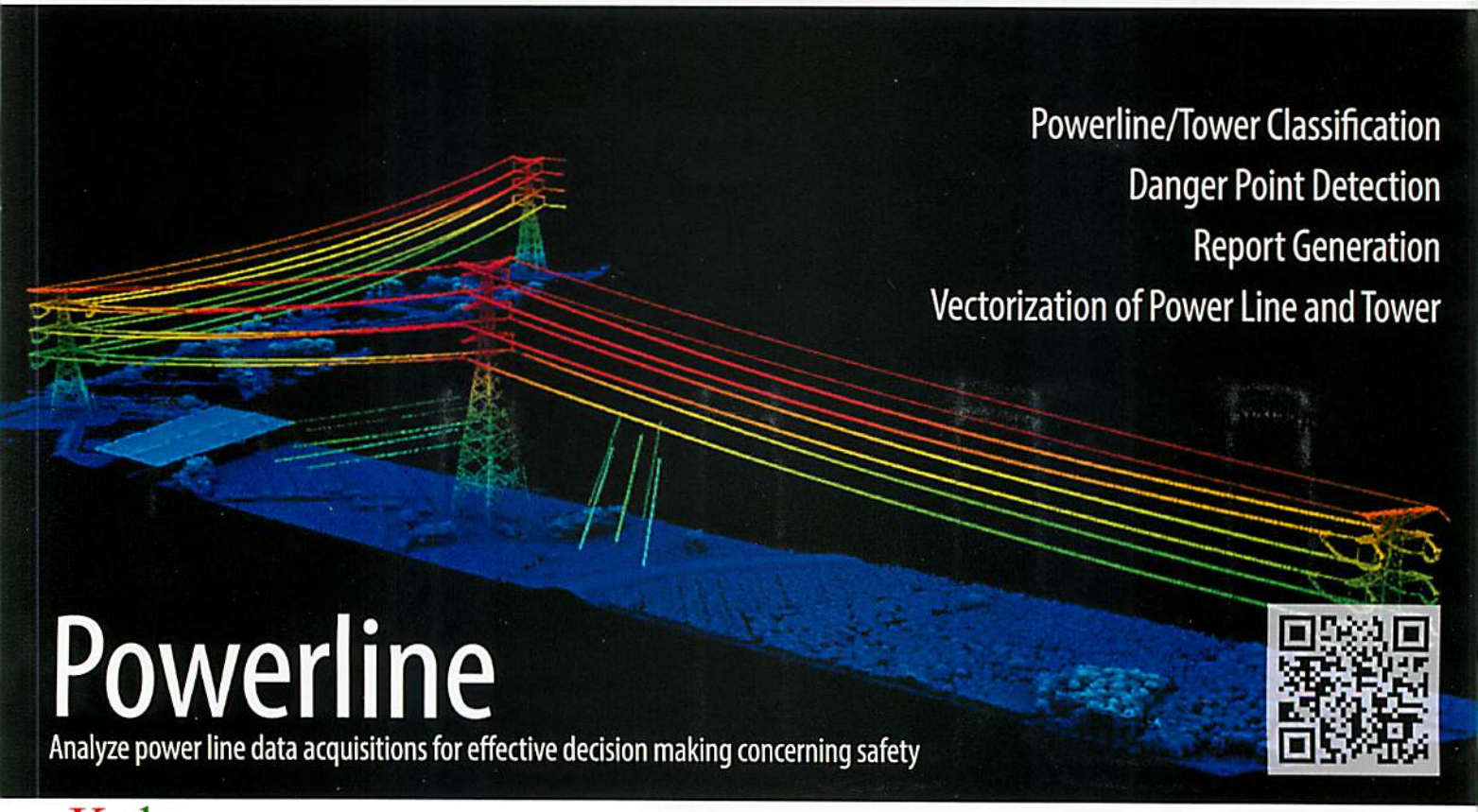

Kokyo 株式会社光響
http://www.symphotony.com/ メール：info@symphotony.com

www.greenvalleyintl.com info@greenvalleyintl.com (+1) 209.720.4054 2120 University Ave. Ste. 210 | Berkeley, CA | USA | 94704

GreenValley International
Map the World in 3D

LiBackpack

LiBackpack

A lightweight, cost-effective data collection system. Terrestrial based scanning system integrating both LiDAR and SLAM technology. This allows for seamless and accurate indoor/outdoor capturing capabilities. Comfortable, ergonomic and user-friendly it allows the user to scan for hours. Incorporating Velodyne sensors (VLP-16/HDL32E) allows for a redefined, POS-less, high-precision 3D mapping system.

High Precision

Combined with LiDAR and SLAM algorithms to achieve cm-level precision measurements.

High Efficiency

1:1 data processing time, obtain high precision point cloud data.

Low Cost

Without GPS and INS, the overall cost of the system is greatly reduced.

Multi-Platform

The lightweight design allows LiBackpack to not only be mounted on vehicles and aircrafts, it can also be used handheld.

Easy Operation

LiBackpack is highly automated – a one button operation.

Technical Specifications

Dimensions(mm)	896*302*120
LiDAR Sensor	HDL32/VLP16
Weight	6.0kg / 5.5kg
LiDAR Accuracy	±3cm
Global SLAM Accuracy	±0.1%
Point Cloud Formats	Las, ply, bag
Power	60W
Voltage	19V
Operating Current	2.3A
IMU	MEMS, output drift-free roll, pitch, true/magnetic North referenced yaw
Battery	2600mAh
Ports	HDMI, 4USB, Mini Display Port, Ethernet, Power Port, SD Card Port
Control and Display	Web control and display (cell phone, tablet)
Storage	512G SSD

Kokyo 株式会社光響
http://www.symphotony.com/ メール：info@symphotony.com
www.greenvalleyintl.com info@greenvalleyintl.com (+1) 209.720.4054 2120 University Ave. Ste. 210 | Berkeley, CA | USA | 94704
GreenValley International Map the World in 3D